TOWMOTOR®

# COMPACT AND ECONOMICAL ELECTRIC PALLET TRUCK WITH FOLDING PLATFORM & POWER STEERING

2.0 tonnes

## NO COMPROMISE ON QUALITY

While our ECONOMY warehouse products have an affordable price, that doesn't mean you need to compromise on quality or performance. They are designed to be robust and durable and give many years of service with minimal maintenance requirements.

Fast, simple and powerful, but safe and easy-to-use for all your horizontal pallet transport needs in a wide range of Light and Medium Duty applications. Creep speed button ensures high maneuverability in confined areas when operating at low speeds with the tiller in the upright position.

The standard EPS Power Steering makes the truck highly maneuverable while
Curve control 'Corner control' system reduces speed automatically when cornering.

Safe, Reliable and Economical!

AC EPS

CE

**SPECIFICATIONS**

TPD20ER

# TPD20ER

## COMPACT AND ECONOMICAL ELECTRIC PALLET TRUCK WITH FOLDING PLATFORM & POWER STEERING

2.0 tonnes

Li-ion OPTIONAL

AC EPS

### FEATURES

- 2.000 kg load capacity
- Electric Power Steering (EPS)
- Low Maintenance AC Drive Motor
- Lead-Acid Battery 210Ah (li-ion optional)
- Battery level indicator and operating hours meter (BDI)
- Zapi Controller
- Side Battery Extraction
- Ergonomic and durable Curtis tiller-handle for maximum operator comfort
- External charger
- Key switch
- Compact design

### DURABLE STEERING SYSTEM

A direct-drive steering system employing gear wheels rather than belt and pulley means minimal maintenance and reliable operation.

### EASY TO ADJUST FORK LEVERAGE

The strong forks, constructed from heavy-guage steel are easy to adjust via conveniently located bolts.

### OPTIMAL TRACTION

The internal suspension system design ensures that the drive wheel is under an even load regardless of operating conditions, providing optimal traction.

# VDI - PERFORMANCE & DIMENSIONS

| | | | | |
|---|---|---|---|---|
| | **CHARACTERISTICS** | | | |
| 1.1 | Manufacturer | | | Towmotor |
| 1.2 | Manufacturer's model designation | | | TPD20ER |
| 1.3 | Power source: (battery, diesel, LP gas, petrol) | | | Electric (battery) |
| 1.4 | Operator type: pedestrian,(operator)-standing, -seated | | | Pedestrian |
| 1.5 | Load capacity | Q | (kg) | 2000 |
| 1.6 | Load center distance | c | (mm) | 600 |
| 1.8 | Load wheel axle to fork face (forks lowered) | x | (mm) | 815/865/1331 |
| 1.9 | Wheelbase | y | (mm) | 1211/1261/1331 |
| | **WEIGHT** | | | |
| 2.1 | Truck weight with load, with maximum battery weight | | kg | 710 |
| 2.2 | Axle loadings with nominal load & maximum battery weight, drive/load side | | kg | 1300/1410 |
| 2.3 | Axle loadings without load & with maximum battery weight, drive/load side | | kg | 600/110 |
| | **WHEELS, DRIVE TRAIN** | | | |
| 3.1 | Tyres: PT=PowerThane, Vul=Vulkollan, drive/load side | | | PU/PU |
| 3.2 | Tyre dimensions, drive side | | (mm) | 250X70 |
| 3.3 | Tyre dimensions, load side | | (mm) | 82X126 |
| 3.4 | Castor wheel dimensions (diameter x width) | | (mm) | 127X57 |
| 3.5 | Number of wheels, load/drive side (x=driven) | | (mm) | 1X+2/2 (4) |
| 3.6 | Track width (center of tyres), drive side | b10 | (mm) | 490 |
| 3.7 | Track width (center of tyres), load side | b11 | (mm) | 340/370/470/505 |
| | **DIMENSIONS** | | | |
| 4.6 | Lift height | h5 | (mm) | 120 |
| 4.15 | Fork height, fully lowered | h13 | (mm) | 82 |
| 4.9 | Height of tiller arm / steering console (min./max.) | h14 | (mm) | 1150/1430 |
| 4.19 | Overall length | l1 | (mm) | 1710/1760/1830 |
| 4.20 | Length to fork face | l2 | (mm) | 610 |
| 4.21 | Overall width | b1 | (mm) | 775 |
| 4.22 | Fork dimensions (thickness, width, length) | s / e / l | (mm) | 54X180X1100(1150/1220) |
| 4.25 | Overall width of forks | b5 | (mm) | 520/550/650/685 |
| 4.32 | Ground clearance at center of wheelbase, (forks lowered) | m2 | (mm) | 28 |
| 4.33 | Working aisle width (Ast) with 1000 x1200 mm pallets, load crosswise, platform up/down | Ast | (mm) | 1910/1960/2030 |
| 4.34 | Working aisle width (Ast) with 800 x1200 mm pallets, load lengthwise, platform up/down | Ast | (mm) | 2010/2010/2030 |
| 4.35 | Turning radius | Wa | (mm) | 1550/1600/1670 |
| | **PERFORMANCE** | | | |
| 5.1 | Travel speed, with/without load | | km/h | 6.7/7.1 |
| 5.2 | Lifting speed, with/without load | | m/s | 0.039/0.056 |
| 5.3 | Lowering speed, with/without load | | m/s | 0.064/0.050 |
| 5.8 | Gradeability, with/without load | | % | 6/12 |
| 5.10 | Service brake | | | ELECTRO MAGNETIC |
| | **ELECTRIC MOTORS** | | | |
| 6.1 | Drive motor capacity (60 min. short duty) | | kW | 1.2 |
| 6.2 | Lift motor output at 15% duty factor | | kW | 1.2 |
| 6.4 | Battery voltage/capacity at 5-hour discharge | | V /Ah | 24/210 |
| 6.5 | Battery weight | | kg | 170 |
| | Battery dimension (LXWXH) | | (mm) | 750X170X534 |
| | **MISCELLANEOUS** | | | |
| 8.4 | Level of noise at the ear level of the driver according to EN 12053 | | dB(A) | 70 |

Ast = Wa - x + l6 + 200
Ast = Working aisle width
Wa = Turning radius
a = Safety clearance = 2 × 100 mm
R = $\sqrt{(l6 + x)2 + (b12 / 2)^2}$
l6 = Pallet length (800 or 1000 mm)
b12 = Pallet width (1200 mm)

## TPD20ER

## COMPACT AND ECONOMICAL ELECTRIC PALLET TRUCK WITH FOLDING PLATFORM & POWER STEERING

2.0 tonnes

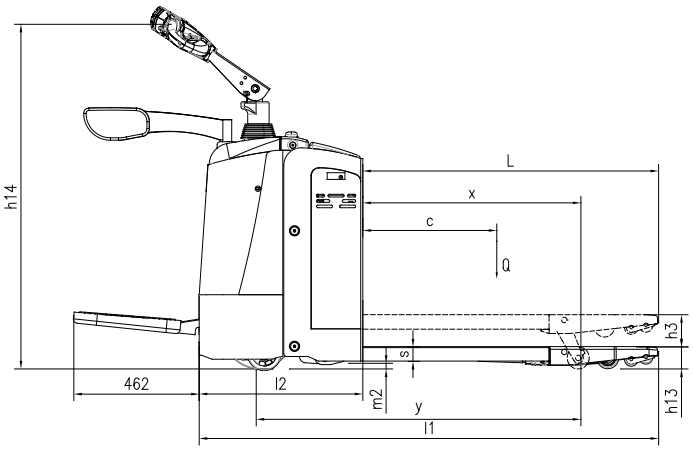


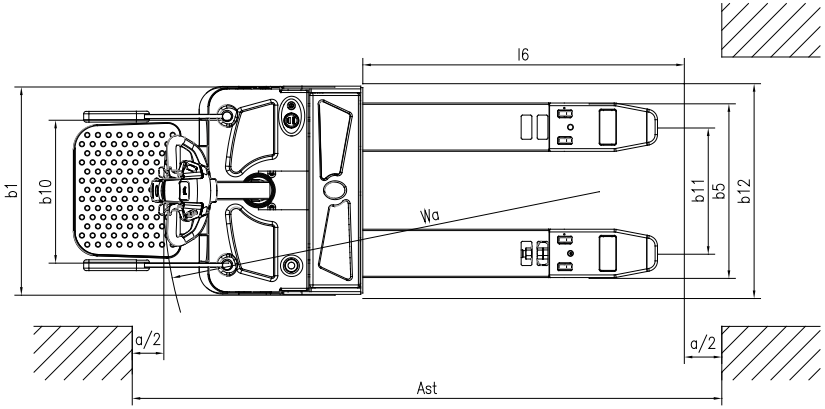

While high quality is paramount to Towmotor, we also maintain a trusted and reliable network of skilled professionals providing support to owners of Towmotor equipment. You will benefit not only from equipment that will provide years of trouble free service, but also gain the support of a team of experts who will be there should you ever need them.
We call it “Towmotor peace of mind.”

**WWW.TOWMOTOR.EU**

MLE B.V.
Hefbrugweg 77, 1332 AM Almere,
The Netherlands
Tel +31 36 54 94 311

Performance specifications may vary depending on standard manufacturing tolerances, vehicle condition, types of tyres, floor or surface conditions, applications or operating environment.
Trucks may be shown with non-standard options.
Specific performance requirements and locally available configurations should be discussed with your distributor.
We follow a policy of continual product improvement. For this reason, some materials, options and specifications could change without notice.

WEST2061 (0620) © 2020

TOWMOTOR®